SG-HP-197-G

PPS Hoppla Chillux Neoprene 6-Can Cooler

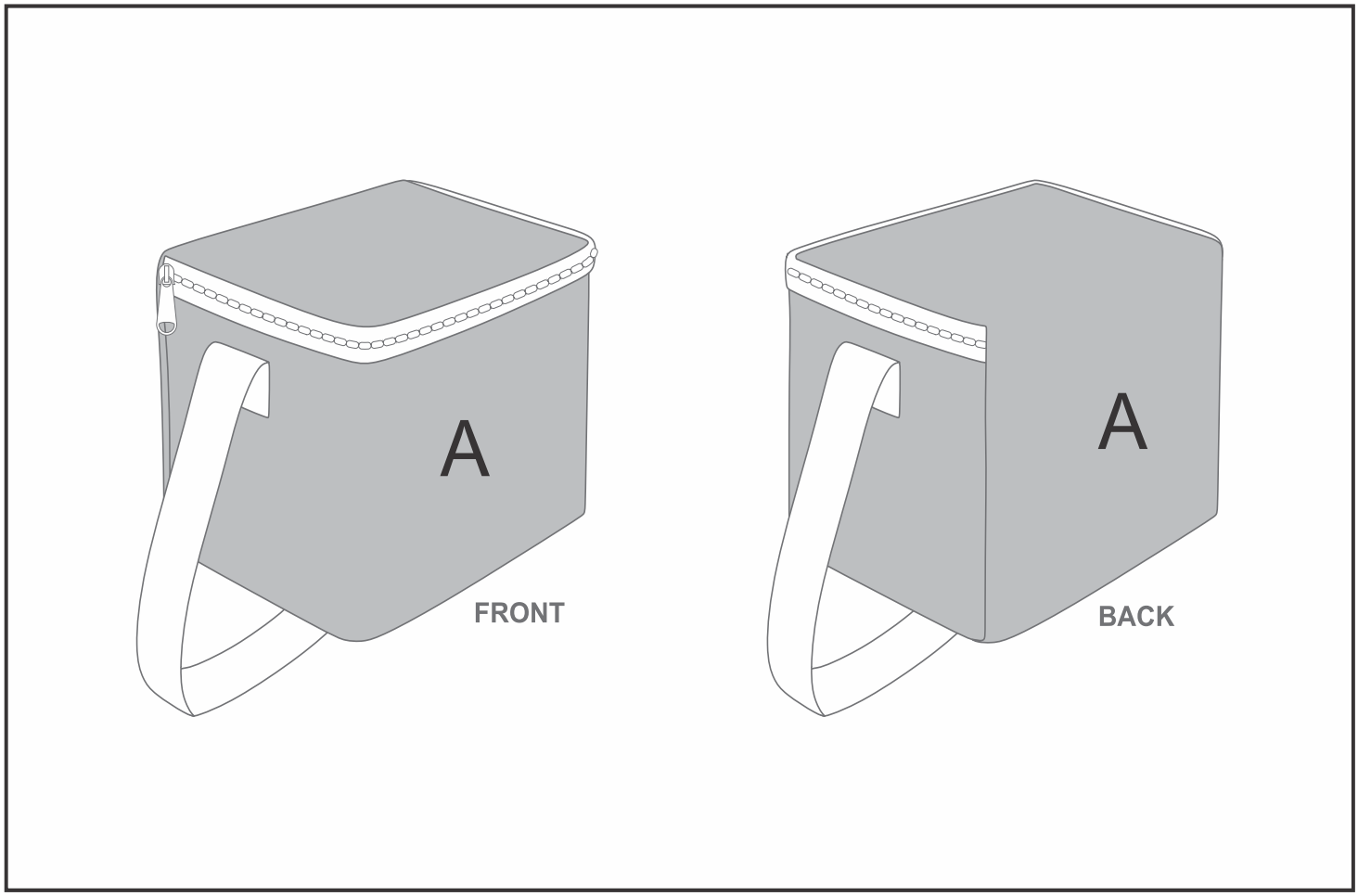

Need to know:

- Includes 1-Position Sublimation (setup fees apply)

- NB: Please note that Neoprene material is not conducive to having predominantly white back grounds due to the print transferring nature of the fabric and process used to complete the print. We always advise to have a background colour within the design as this mitigates the chances of material blemishes and ghosting of print.

Branding Options:

Position	Branding Method (Branding Code)	No. of Colours	Dimension
A	Custom Sublimation A (CPSUB-A)	Full Colour	510mm wide x 920mm high